This drawing is produced using the Irish Grid Geographic Coordinate System

A1

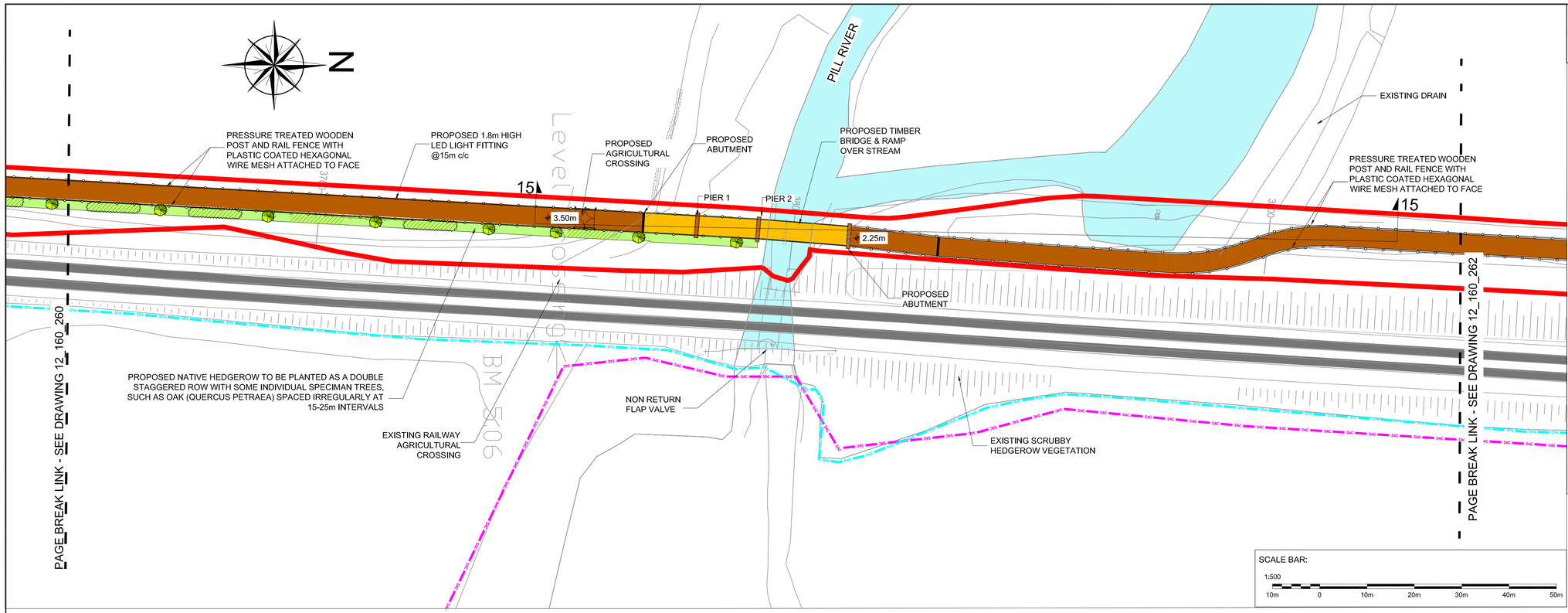

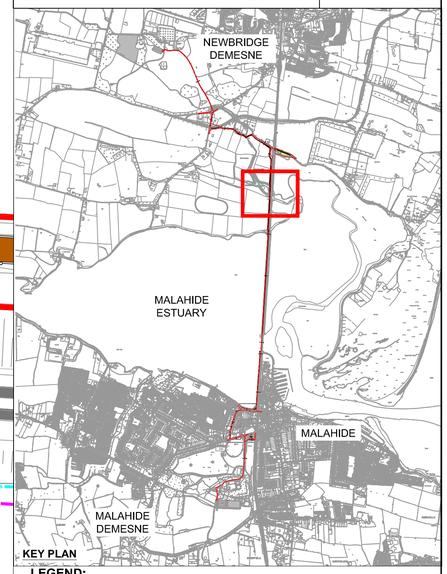

KEY PLAN

LEGEND:

- EXISTING FOOTPATH
- PROPOSED FOOTPATH OR PROPOSED FOOTPATH IMPROVEMENT AS REQUIRED
- PROPOSED GRASS VERGE/LANDSCAPING
- PROPOSED CARRIAGEWAY REALIGNMENT & RESURFACING
- PROPOSED CAR PARKING
- PROPOSED SHARED AREA
- EXISTING SHARED AREA
- EXISTING SHARED STREET TO BE RESURFACED
- SHARED STREET (NEW ROAD MARKINGS ONLY)
- TRAIN TRACKS
- PROPOSED DEVELOPMENT AREA
- PROPOSED TRAIL FINISHED LEVELS — 0.00m OD
- SPECIAL PROTECTION AREAS
- SPECIAL AREAS OF CONSERVATION

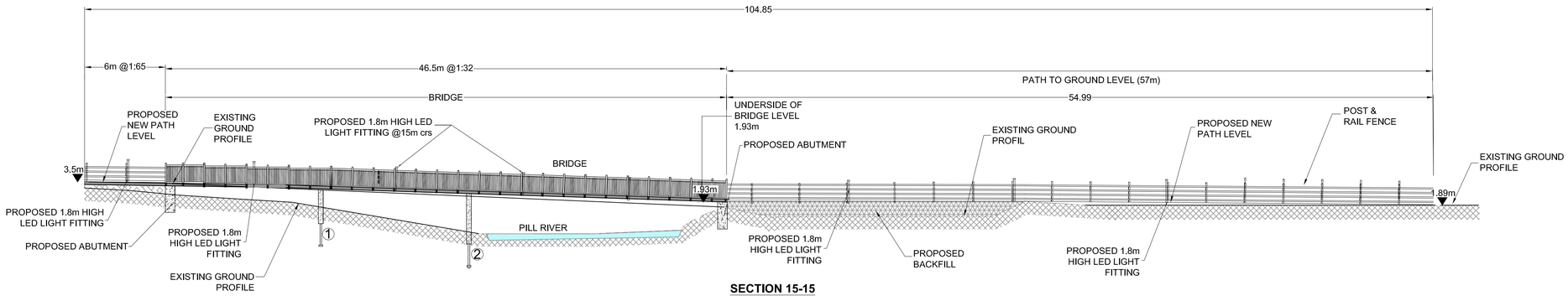

SECTION 15-15
SCALE 1:200

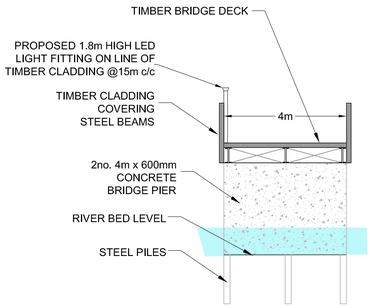

PROPOSED CROSS SECTION OF BRIDGE
SCALE 1:100

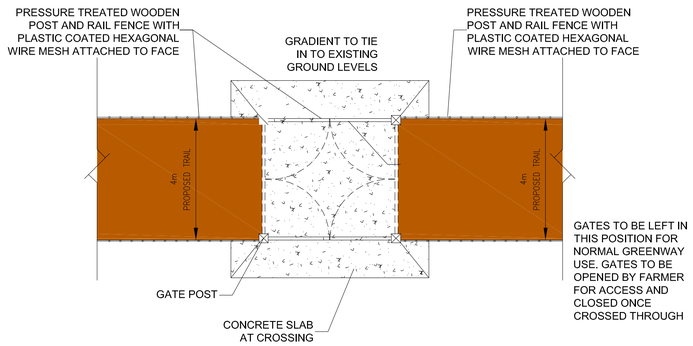

AGRICULTURAL CROSSING POINT DETAIL
SCALE 1:100

NOTES:
ALL TOPSOIL TO BE REUSED ON SITE.
TRAIL TO BE LAID WITH A 1/40 CROSS FALL TO ALLOW SURFACE WATER TO NATURALLY DRAIN INTO THE SURROUNDING LANDS.

OSI Licence No.: EN 0042418 © OSI/GOVERNMENT OF IRELAND A1 - © CSEA 2019 - R6V 00

Revision	Description	Initials	Date

Comhairle Contae Fhine Gall
Fingal County Council

An Roinn um Pleanáil agus Infrastruchtúr Straitéiseach
Planning and Strategic Infrastructure Department

Clifton Scannell Emerson Associates

Project	Broadmeadow Way
Dwg. Title	Overall Surface Layout (Sheet 10 of 17)
Drawn By	AMS
Date	April 2019
Checked by	PD
Scale	1:500 @ A1 1:1000 @ A3
Dwg. No.	12_160_261